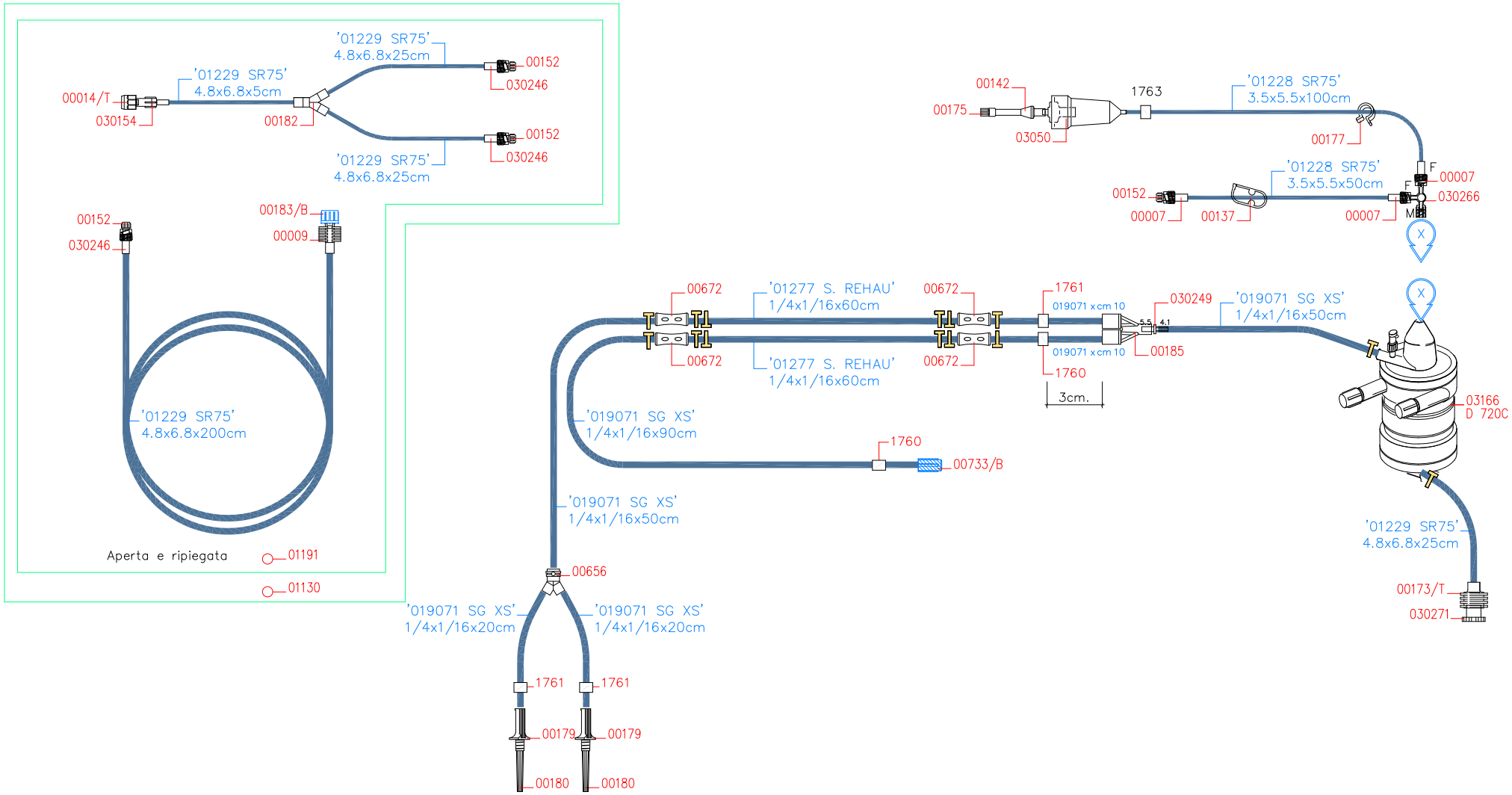

PACKAGING:

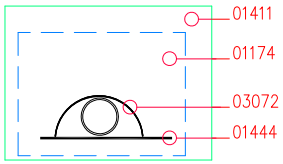

Country	City	Code
RU	MOSCOW	081152
Istitution		Issue
TRANSPLANTOLOGY INST.		02
Circuit type		Page
CARD.		1 of 1

This document contains confidential and proprietary information of SORIN GROUP ITALIA

SORIN GROUP
AT THE HEART OF MEDICAL TECHNOLOGY

Dideco Perfusion Tubing Systems

All design, riproduction, manufacturing, use and sale rights in such information are reserved.

Drawn by	Acad Operator	Account Administrator	RA – Approved BY
D. Longhi	29.04.2010	29.04.2010	29.04.2010